DETAIL DIMENSIONS

Measurements in cm

4945

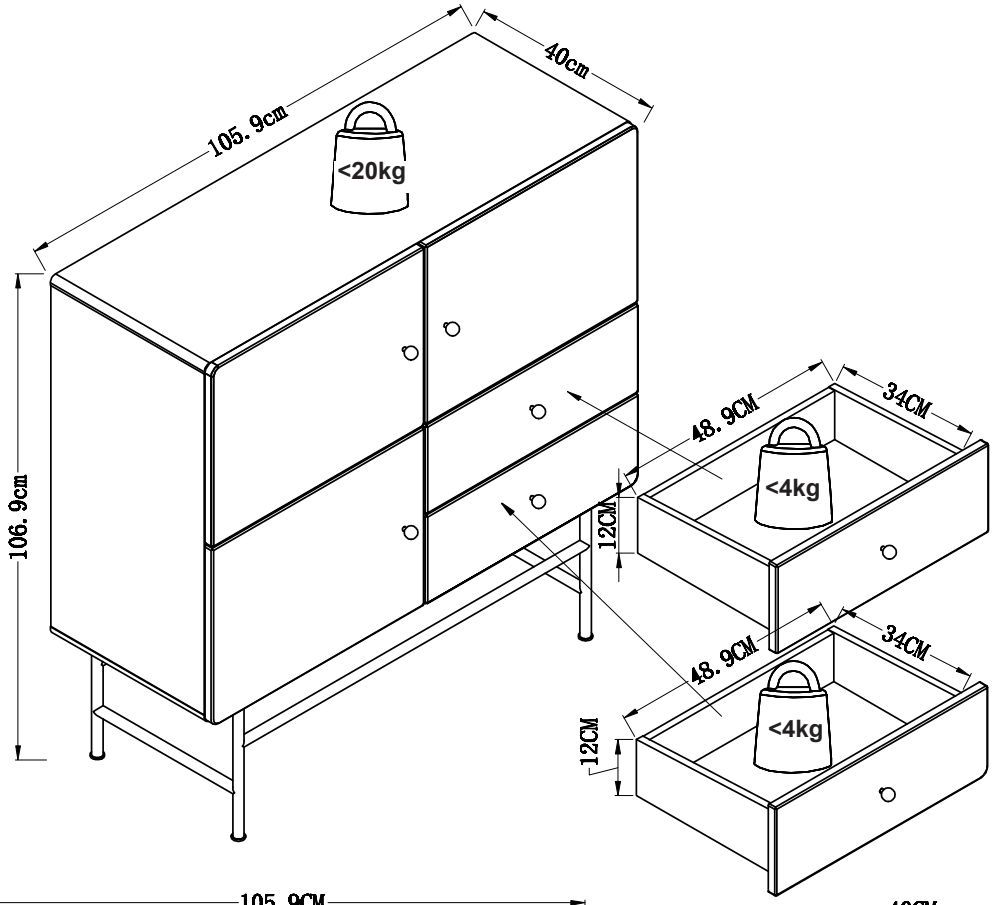

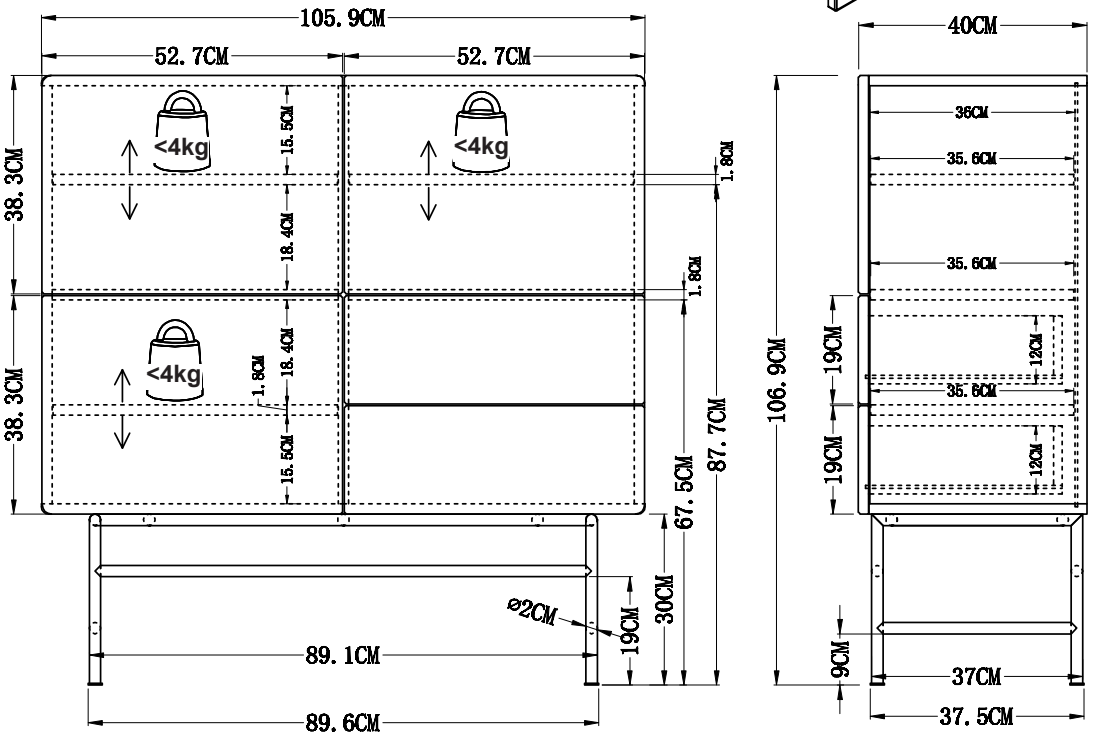

tenzo®